SFC Series Clutch Coupling

SFC-1525 HT Flange Mounted
High Torque

Unit Size	SFC-1525, H.T.	
	Wt. (lbs.)	Inertia (lbs.ft.^{2})
Field	29.500	.....
Rotor	20.493	5.866
Rotor Hub	4.963	.323
Bushing-Rotor Hub: Max. Bore to	3.234	.071
Min. Bore	6.345	.099
Splined Hub	3.582	.077
Bushing-Splined Hub: Max. Bore to	2.064	.033
Min. Bore	4.171	.048

Item	Description	Part Number	Qty.
1	Bushing*		1
	3/4" to 2-11/16" Bore	180-0026 to 180-0057	
2	Retainer Ring	748-0005	1
3	Splined Hub	540-0064	1
4	Armature & Splined Adapter	5204-111-004	1
4-1	Locknut	661-0004	8
4-2	Splined Adapter	104-0011	1
4-3	Autogap Accessory	5323-101-002	1
4-4	Retainer Plate	686-0003	1
4-5	Spacer	748-0333	8
4-6	Armature	5324-111-034	1
4-7	Screw	797-0342	8
5	Mounting Accessory	5321-101-002	2
6	Rotor	5204-751-001	1
7	Bushing*		1
	15/16" to 3" Bore	180-0223 to 180-0256	
8	Rotor Hub	540-0004	1

Drawing I-25631

SFC-1525 HT Flange Mounted
High Torque

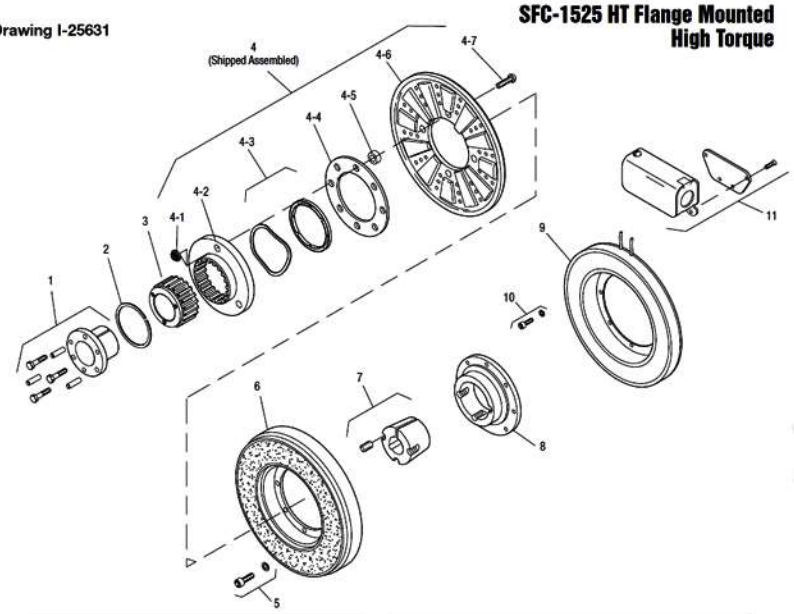

Item	Description	Part Number	Qty.
9	Field - Inside Mounted		1
	6 Volt	5204-451-005	
	24 Volt	5204-451-066	
	90 Volt	5204-451-006	
10	Mounting Accessory - I.M.	5321-101-001	2
11	Conduit Box	5200-101-012	1

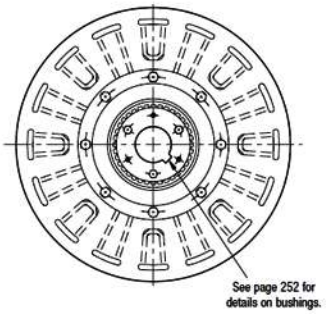

ARMATURE VIEW

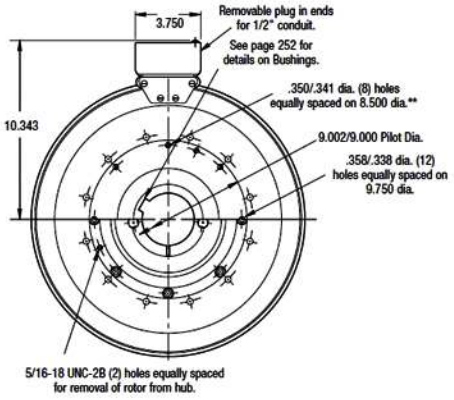

FIELD VIEW

Shaft Size	Keyway Size	Bushing Warner Electric
3/4	3/16 x 3/32	180-0026
13/16	3/16 x 3/32	180-0027
7/8	3/16 x 3/32	180-0028
15/16	1/4 x 1/8	180-0029
1	1/4 x 1/8	180-0030
1 1/16	1/4 x 1/8	180-0031
1 1/8	1/4 x 1/8	180-0032
1 3/16	1/4 x 1/8	180-0033
1 1/4	1/4 x 1/8	180-0034
1 5/16	5/16 x 5/32	180-0035
1 3/8	5/16 x 5/32	180-0036
1 7/16	3/8 x 3/16	180-0037
1 1/2	3/8 x 3/16	180-0038
1 9/16	3/8 x 3/16	180-0039
1 5/8	3/8 x 3/16	180-0040
1 11/16	3/8 x 3/16	180-0041
1 3/4	3/8 x 3/16	180-0042
1 13/16	1/2 x 1/4	180-0043
1 7/8	1/2 x 1/4	180-0044
1 15/16	1/2 x 1/4	180-0045
2	1/2 x 1/4	180-0046
2 1/16	1/2 x 1/4	180-0047
2 1/8	1/2 x 1/4	180-0048
2 3/16	1/2 x 1/4	180-0049
2 1/4	1/2 x 1/4	180-0050
2 5/16	5/8 x 5/16	180-0051
2 3/8	5/8 x 5/16	180-0052
2 7/16	5/8 x 5/16	180-0053
2 1/2	5/8 x 5/16	180-0054
2 9/16	5/8 x 5/16	180-0055
2 5/8	5/8 x 5/16	180-0056
2 11/16	5/8 x 5/16	180-0057