SFC Series Clutch Coupling

SFC-250 Bearing Mounted

Unit Size	SFC-250, B.M.	
	Wt. (lbs.)	Inertia (lbs.in.^{2})
Field & Rotor Assembly	1.00	.253
Field	.651	.....
Rotor	.348	.253
Set Collar	.029	.004
Armature	.234	.255
Armature Hub	.111	.030
Antibacklash Armature	.....	.293

Drawing I-25523

SFC-250 Bearing Mounted

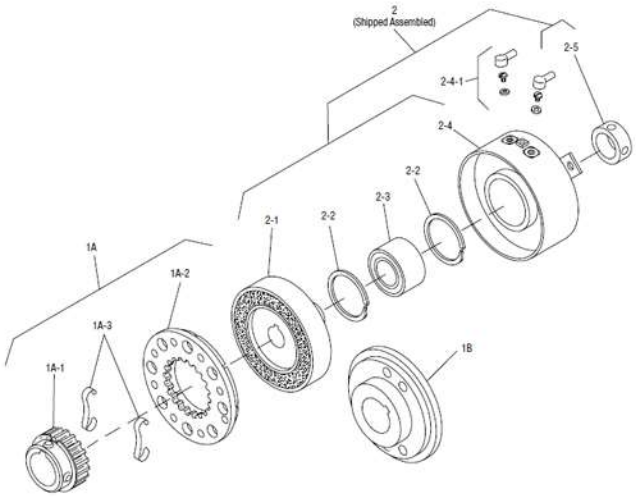

Item	Description	Part Number	Qty.
1A	Armature and Hub		
1A-1	Armature Hub		1
	3/8" Bore	5103-541-002	
	1/2" Bore	5103-541-004	
	5/8" Bore	5103-541-006	
	3/4" Bore	5103-541-008	
1A-2	Armature	5124-111-001	1
1A-3	Release Spring	5103-101-003	1
1B	Antibacklash Armature		1
	3/8" Bore	5365-111-003	
	1/2" Bore	5365-111-005	
	5/8" Bore	5365-111-007	
	3/4" Bore	5365-111-009	
2	Field and Rotor Assembly		1
	6 Volt – 3/8" Bore	5103-452-002	
	24 Volt – 3/8" Bore	5103-452-004	
	90 Volt – 3/8" Bore	5103-452-007	
	6 Volt – 1/2" Bore	5103-452-016	
	24 Volt – 1/2" Bore	5103-452-018	
	90 Volt – 1/2" Bore	5103-452-021	
2-1	Rotor		1
	3/8" Bore	5103-751-014	
	1/2" Bore	5103-751-016	

Item	Description	Part Number	Qty.
2-2	Retainer Ring	748-0371	2
2-3	Ball Bearing	166-0108	1
2-4	Field		1
	6 Volt	5103-451-018	
	24 Volt	5103-451-020	
	90 Volt	5103-451-023	
2-4-1	Terminal Accessory	5103-101-002	1
2-5	Set Collar*	266-0005	1

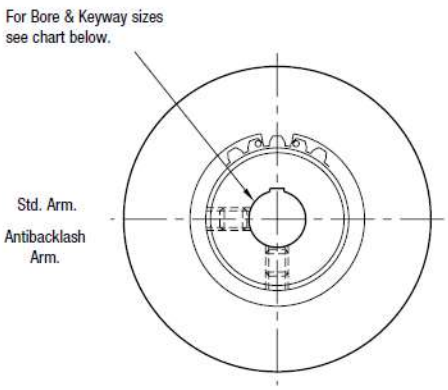

ARMATURE VIEW

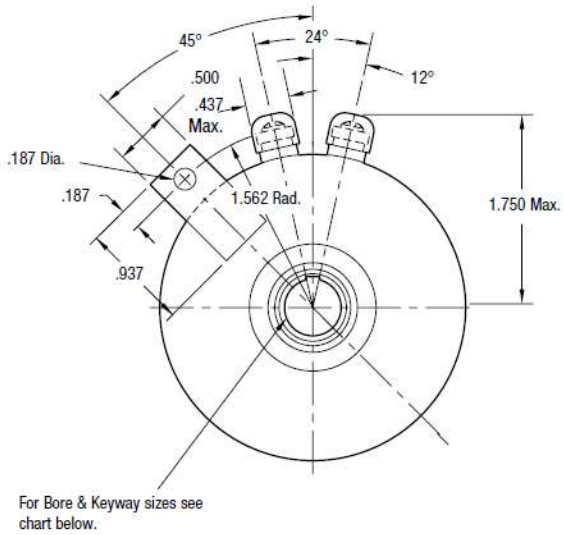

FIELD VIEW