On-Off Controls CBC-100, CBC-150

Integral/Conduit Box Mounted Controls

The CBC-100 and CBC-150 series are UL listed, conduit box mounted controls for 90 volt clutches and brakes. Models are available for either 120 VAC or 220/240 VAC input.

CBC-100 series
Single unit capacity

The CBC-100 mounts inside a standard Warner Electric conduit box and includes rectification and suppression circuits.

- UL and c UL
- CSA
- Compact
- Single channel
- Mounts inside conduit box

CBC-150 series
Dual channel capacity

The CBC-150 replaces the cover on the standard module conduit box (part no. 5370-101-042). Provides rectification and suppression for two devices. Green LED indicates power to clutch. Red LED indicates power to brake.

- UL and c UL
- Dual channel
- Replaces the cover on the module conduit box

Specifications

	CBC-100-1	CBC-100-2	CBC-150-1	CBC-150-2
Part No.	6003-448-101	6003-448-103	6004-448-001	6004-448-002
Input	120 VAC 50/60 Hz	220/240 VAC 50/60 Hz	120 VAC 50/60 Hz	220/240 VAC 50/60 Hz
Output	90 VDC full wave rectified .8 Amp max.	90 VDC half wave .8 Amp	90 VDC full wave rectified Dual .8 Amp	90 VDC half wave Dual .8 Amp
Ambient Temperatures	-20° to 113°F (-29° to 45°C)			
Switching	External to control, accomplished on A.C. line using relay or triac.			
	SPST	SPST	SPDT	SPDT
Solid State (maximum leakage current <2 mA)	140 VAC, 1 Amp min.	280 VAC, 1 Amp min.	140 VAC, 2 Amp min.	280 VAC, 2 Amp min.
Electro-mechanical	120 VAC, 1 Amp min.	240 VAC, 1 Amp min.	120 VAC, 1 Amp min.	240 VAC, 1 Amp min.

Connection diagrams

CBC-100-1, -2

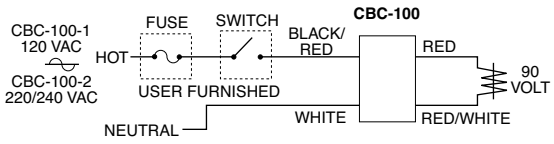

CBC-150-1, -2

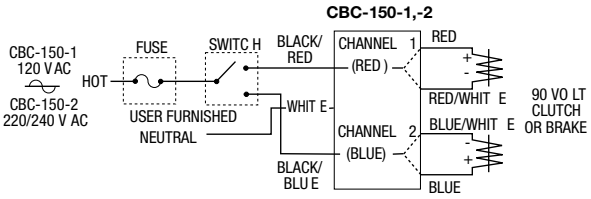

Dimensions

CBC-100-1, -2

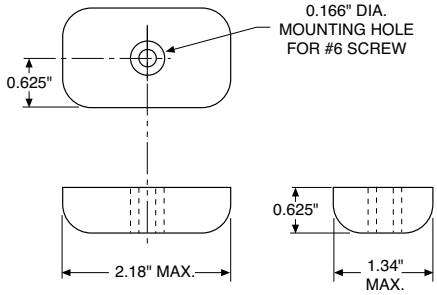

CBC-150-1, -2

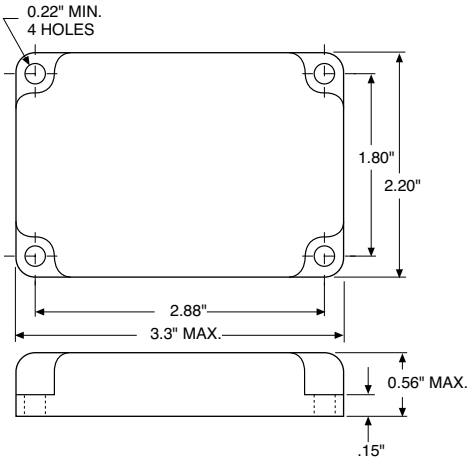

All dimensions nominal unless otherwise specified.

Integral/Electrically Released Motor Brake Controls

CBC-160

The CBC-160 series clutch/brake controls provide a single 90 VDC adjustable output for use with any clutch/brake unit. The adjustable output will provide consistent and repeatable release for Warner Electric's 90 VDC permanent magnet electrically released brakes.

The CBC-160 mounts as the cover on the standard module conduit box (part no. 5370-101-042).

The 160-1 accommodates 120 volts A.C. motors.

- UL
- Adjustable 30-100 VDC
- LED indicator
- 120 volt A.C. input

The power to the 160-2 control can come from either a 230 volt or 460 volt A.C. motor. Customer-provided switching is accomplished through the motor starter on the A.C. input. This allows convenient retrofit of spring-set style motor brakes and inexpensive installation of new applications.

- UL
- Adjustable 30-100 VDC
- Power from motor
- Easy retrofit
- 230/460 motors

Dimensions

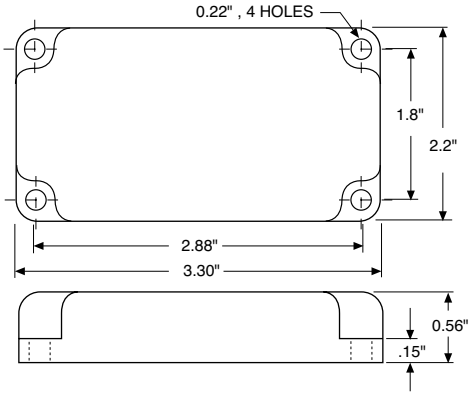

All dimensions nominal unless otherwise specified.

Specifications

	CBC-160-1	CBC-160-2
Part No.	6013-448-001	6013-448-002
Input	120 VAC, 50/60 Hz	220/240 VAC, 60 Hz, 1 Phase, 100 VA max.
Status Indicator	Red LED indicates power to the brake	—
Output	Single Channel, 30-100 VDC half-wave rectified nominal, 0.8 Amps maximum	
Ambient Temperatures	0° to 122°F (-18° to 50°C)	
Switching	Accomplished through motor starter or on A.C. line using relay or triac	

Connection Diagram

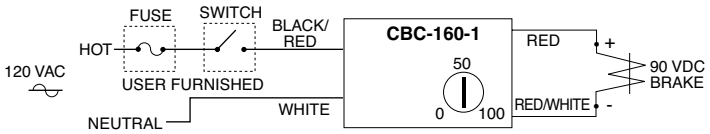

WYE Connected Motor

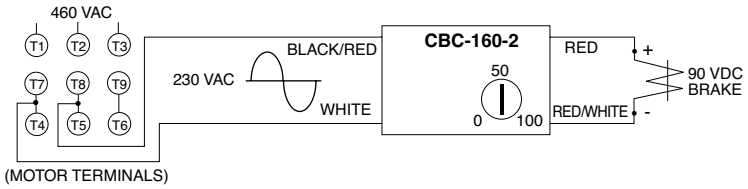

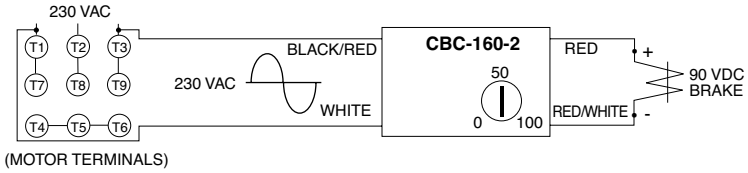

DELTA Connected Motor

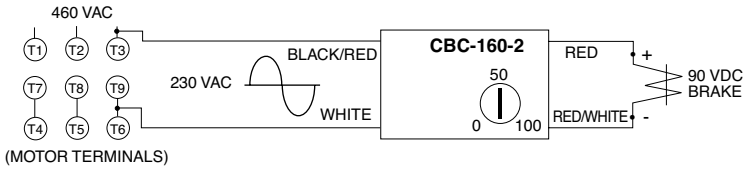

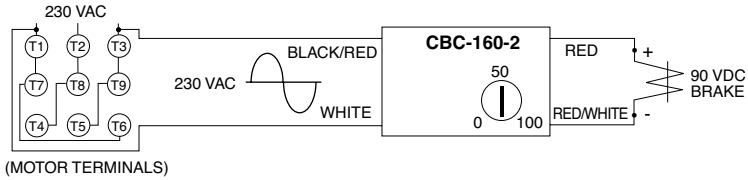

On-Off Controls CBC-801

Plug-in Octal Socket Power Supplies

The CBC-801 is a basic on-off power supply that provides full voltage to a 90 volt clutch or brake and is activated by an external switch. This type of power supply is sufficient for many clutch/brake applications.

CBC-801 series
Multi-unit capacity

The CBC-801 is a plug-in power supply which is used with an octal socket. The wiring connections are made at the socket. The CBC-801 will operate two units separately—or simultaneously. Octal socket is purchased separately.

- UL
- CSA
- For basic on-off operation
- Wiring connections made at octal socket
- Arc suppression circuitry extends switch life
- Fused for overload protection
- LED output indicators
- DIN rail mountable

Specifications

	CBC-801-1	CBC-801-2
Part No.	6001-448-004	6001-448-006
Input Voltage	120 VAC, 50/60 Hz	220/240 VAC, 50/60 Hz
Output	90 VDC, 1.25 A max.	
Circuit Protection	Fused 1.6 Amp, 250 V fast-blo	
Ambient Temperature	-23° to 116°F (-31° to 47°C)	
Max. Cycle Rate	Limited by the clutch or brake, variable with application	
Switching	Single pole, double throw Minimum contact rating: 10 Amp, 28 VDC resistive or 10 Amp, 120 VAC inductive	
Status Indicator	Red LED indicates brake is energized, Green LED indicates clutch is energized	
Mounting	Two versions of octal socket are available: 6001-101-001 foot mount 6001-101-002 DIN rail mount	

Dimensions

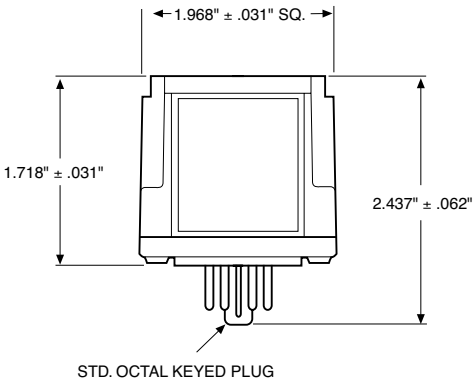

OCTAL SOCKET

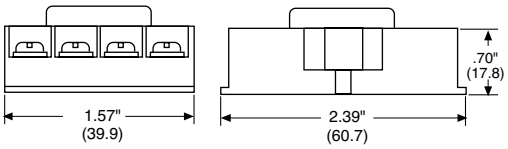

DIN RAIL MOUNT SOCKET

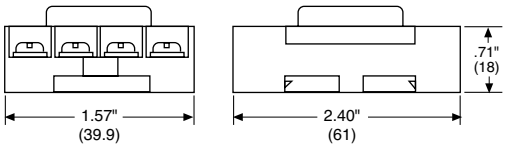

All dimensions nominal unless otherwise specified.

Connection Diagram

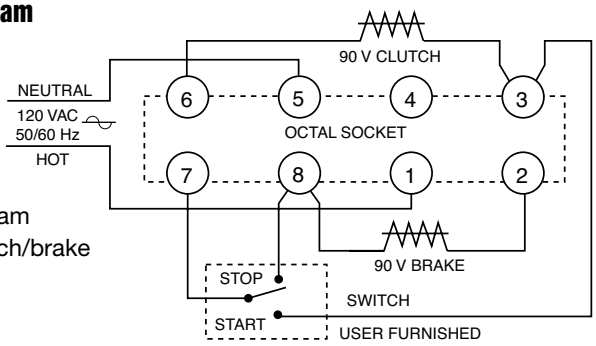

Connection diagram for operating clutch/brake separately.

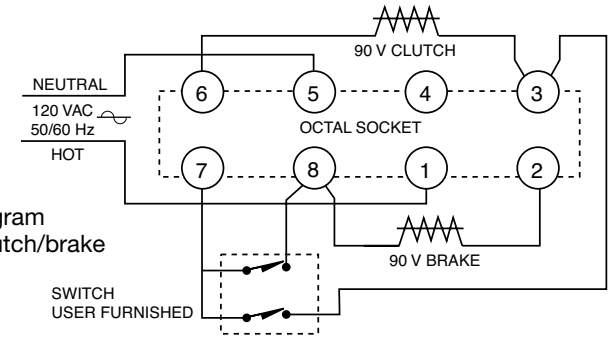

Connection diagram for operating clutch/brake simultaneously.

Plug-in Octal Socket Power Supplies

CBC-802
PLC compatible

The CBC-802 is a power supply with solid state circuits for load switching. A brake and clutch may be operated separately—or, two brakes or two clutches, one unit on at a time. The CBC-802 mounts on an octal socket (purchased separately), and the wiring connections are made at the socket terminals. Octal socket sold separately, refer to mounting specifications for part number.

- SP
- Plug-in power supply with solid state switching circuits—increases switch service life
- Adjustable time delay for controlling clutch/brake overlap
- Internally fused for overload protection
- DIN rail mountable
- LED output indicators

Specifications

	CBC-802
Part No.	6002-448-001
Input	120 VAC, 50/60 Hz
Output	90 VDC, 0.5 A max.
Status Indicator	Red LED indicates brake energized. Green LED indicates clutch energized.
Circuit Protection	Fused 0.5 Amps, 250 V
Ambient Temperature	-20° to 113°F (-29° to 45°C)
Leakage Current	500 uA max. for solid state switches
Max. Cycle Rate	Limited by the clutch or brake, variable with application
Switching	Momentary contact, maintained contact, or solid state open collector logic Minimum contact rating 20 VDC resistive, 0.01 Amps Minimum input pulse—1 millisecond
Adjustments	Externally adjusted potentiometer sets overlap between clutch and brake from 0 to 130 MS.
Mounting:	Two versions of octal socket are available: 6001-101-001 foot mount 6001-101-002 DIN rail mount

Connection Diagram

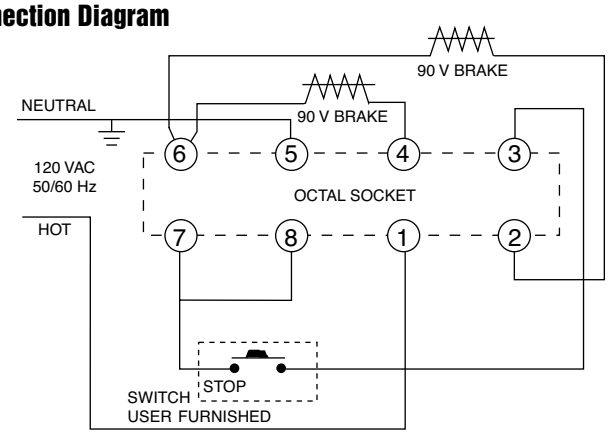

Dimensions

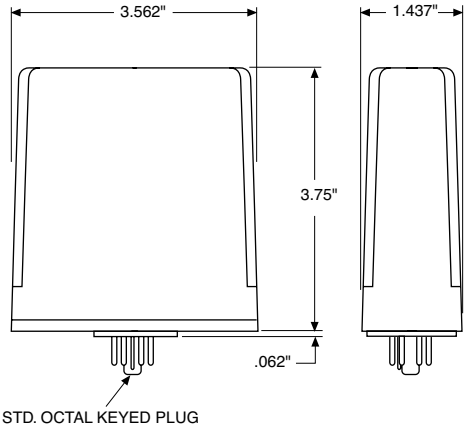

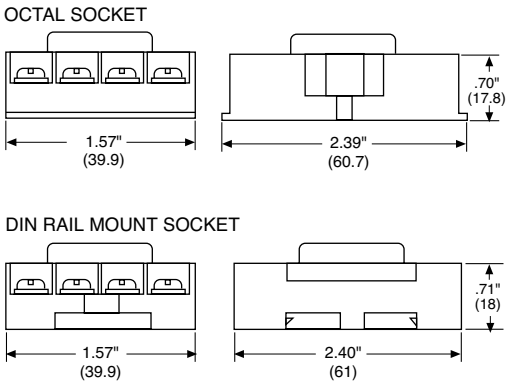

All dimensions nominal unless otherwise specified.

On-Off Controls CBC-400

Panel Mounted Control

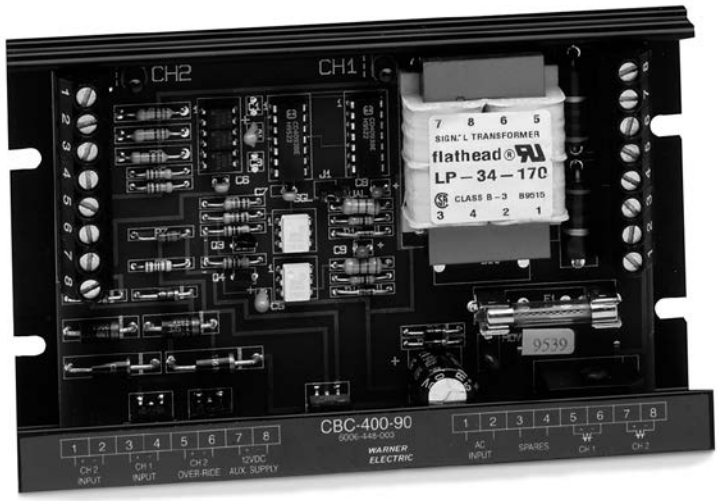

CBC-400 series
Dual channel controls

The CBC-400 series is a basic on-off control which supplies 24 or 90 VDC for electric clutch/brake operation. They offer optically isolated switching inputs for start, stop, and emergency stop (E-stop). These controls can be set up to operate the two outputs alternately (single) or simultaneously (dual). Refer to the Appendix page 282 for additional setup and switching information.

- 24 or 90 Volt DC output
- Auxiliary 12V supply
- Fast coil suppression
- Single or dual channel operation
- Optically isolated input switching

Specifications

	CBC-400-90	CBC-400-24
Part No.	6006-448-003	6006-448-002
Input Voltage	120 VAC	24-30 VAC
Output Voltage	90 VDC	24 VDC
Output Current	1 Amp/Channel 2 Amps Total	5 Amps/Channel 5 Amps Total
Auxiliary Supply	12 VDC 250 mA	
Circuit Protection	Fused 2.5 Amp, 250 V fast-blo	Fused 6.3 Amp, 250 V fast-blo
Ambient Temperature	+32° to 122°F (0° to 50°C)	
Status Indicators	Red LED indicates channel is energized.	
Adjustments	Jumper for single or dual operation. See appendix on page 282 for explanation.	
Inputs	3 Optically isolated, 10-30 VDC, 3-9 mA for Channel 1, Channel 2 and Channel 2 override (applies full voltage to channel 1 output).	

Enclosure (Optional)

- Lift off hinge
- Quick-release latches
- Conforms to NEMA Type 13
- European Standard IEC 529, IP65

Part No.	6042-101-004
Size	8"H x 6"W x 4"D (203.2 x 152.4 x 101.6 mm)

Connection Diagram

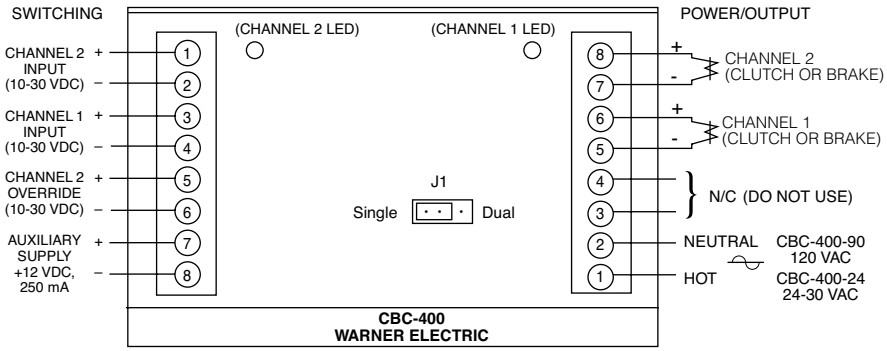

All dimensions nominal unless otherwise specified.

Dimensions

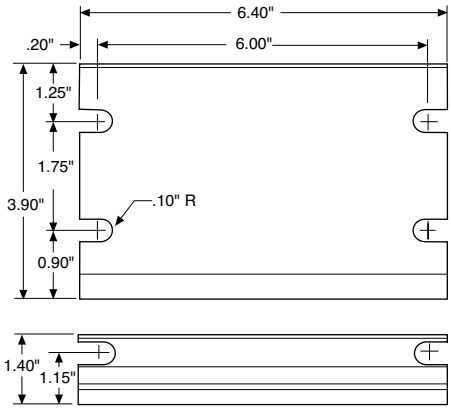

Panel Mounted Control

CBC-450 series Dual channel control with transformer for variable input voltage

The CBC-450 series is a basic on-off control which supplies 24 or 90 VDC for electric clutch/brake operation. They offer optically isolated switching inputs for start, stop, and emergency stop (E-stop). These controls can be set up to operate the two outputs, alternately (single) or simultaneously (dual). Refer to the Appendix page 282 for additional setup and switching information. The CBC-450 series has a power transformer which will operate with a 120, 220, 240, 380 or 480 VAC input.

- 24 or 90 Volt DC output
- Auxiliary 12V supply
- Fast coil suppression
- Single or dual channel operation
- Optically isolated switching

Enclosure (Optional)

- Lift off hinge
- Quick-release latches
- Conforms to NEMA Type 13
- European Standard IEC 529, IP65

Part No.	6006-101-007
Size	6"H x 6"W x 6"D (152.4 x 152.4 x 152.4 mm)

Specifications

	CBC-450-90	CBC-450-24
Part No.	6006-448-006	6006-448-005
Input Voltage	120/220/240/380/480 VAC	
Output Voltage	90 VDC	24 VDC
Output Current	1 Amp/Channel 1.2 Amps Total	4 Amps/Channel 4 Amps Total
Auxiliary Supply	12 VDC 250 mA	
Circuit Protection	Fused 1.5 Amp	Fused 5 Amp
Ambient Temperature	+32° to 122°F (0° to 50°C)	
Status Indicators	Red LED indicates channel is energized.	
Adjustments	Jumper for single or dual operation. See appendix on page 282 for explanation.	
Inputs	3 Optically isolated, 10-30 VDC, 3-9 mA for Channel 1, Channel 2 and Channel 2 override (E-stop).	

Dimensions

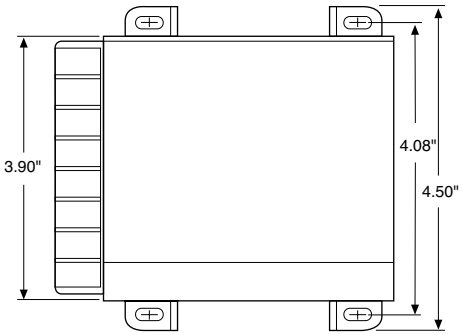

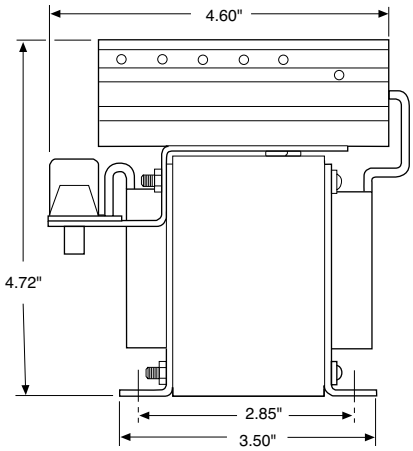

Connection Diagram

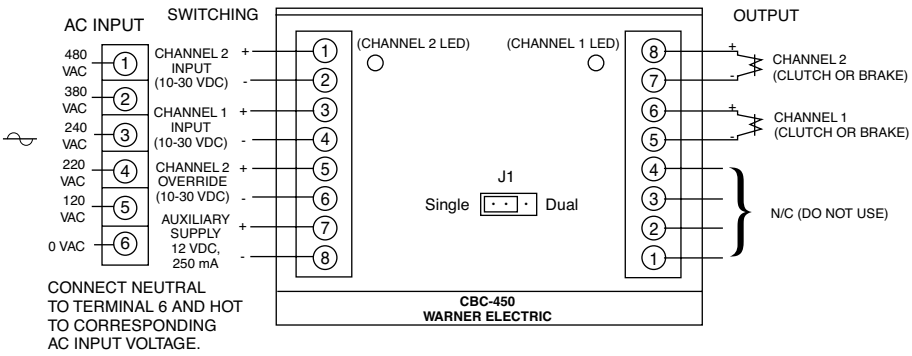

All dimensions nominal unless otherwise specified.